MH-42B6J Hand Scanning Microphone
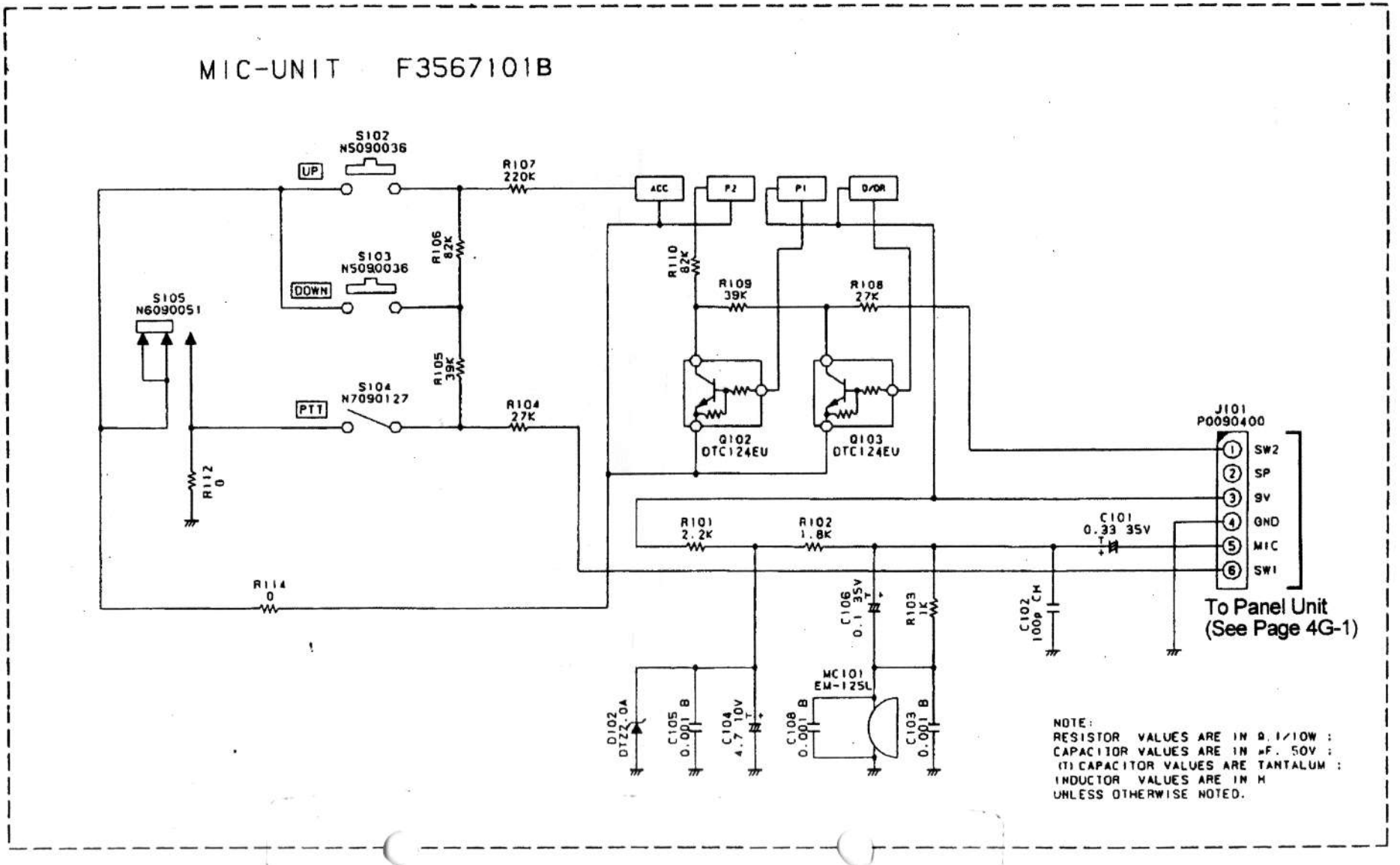
Circuit Diagram